Cross section in track axis

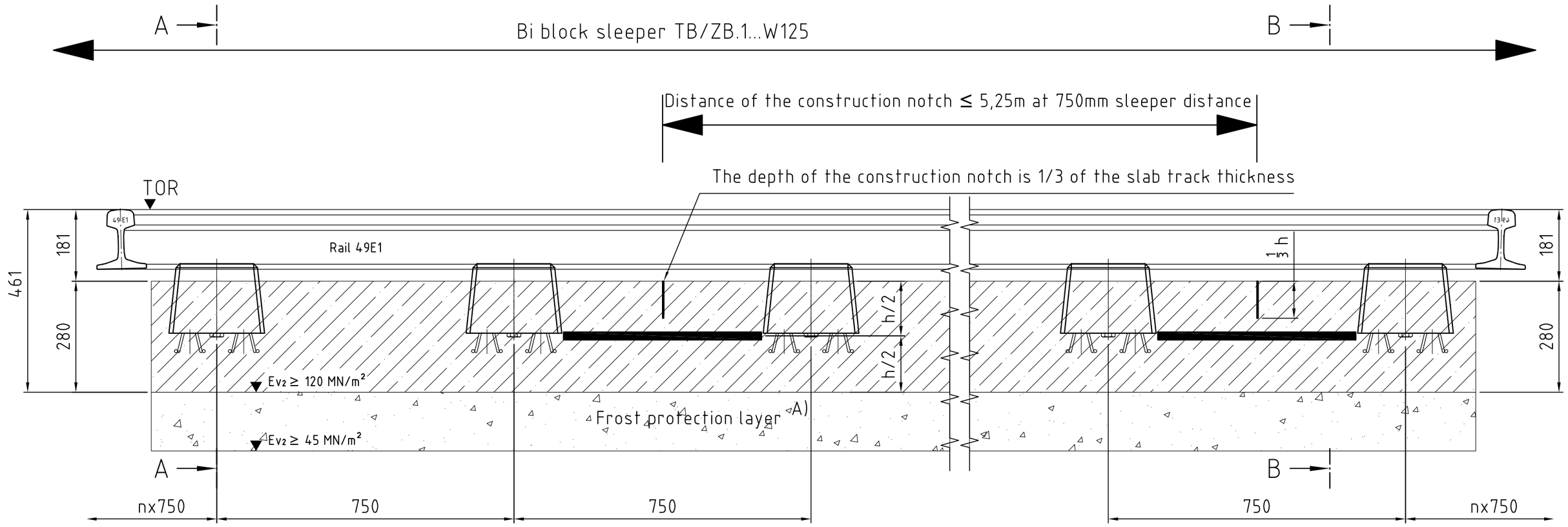

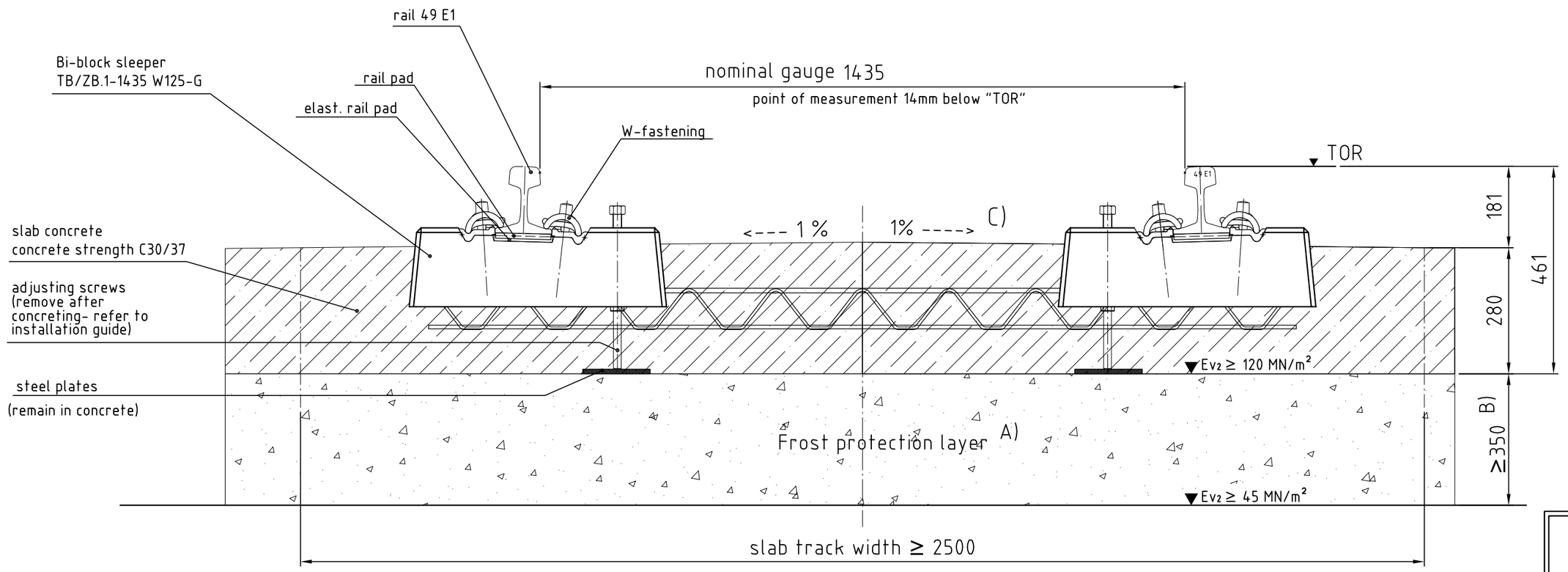

Notes:

A) Frost protection layer correlated with unbound layer

B) Construction height, acc. to static calculation and RStO 12, ≥350mm

C) The slope of the concrete slab can be a roof-profile or unilateral

PROJECT: Niederlande
Utrecht Uithoflijn

B - B

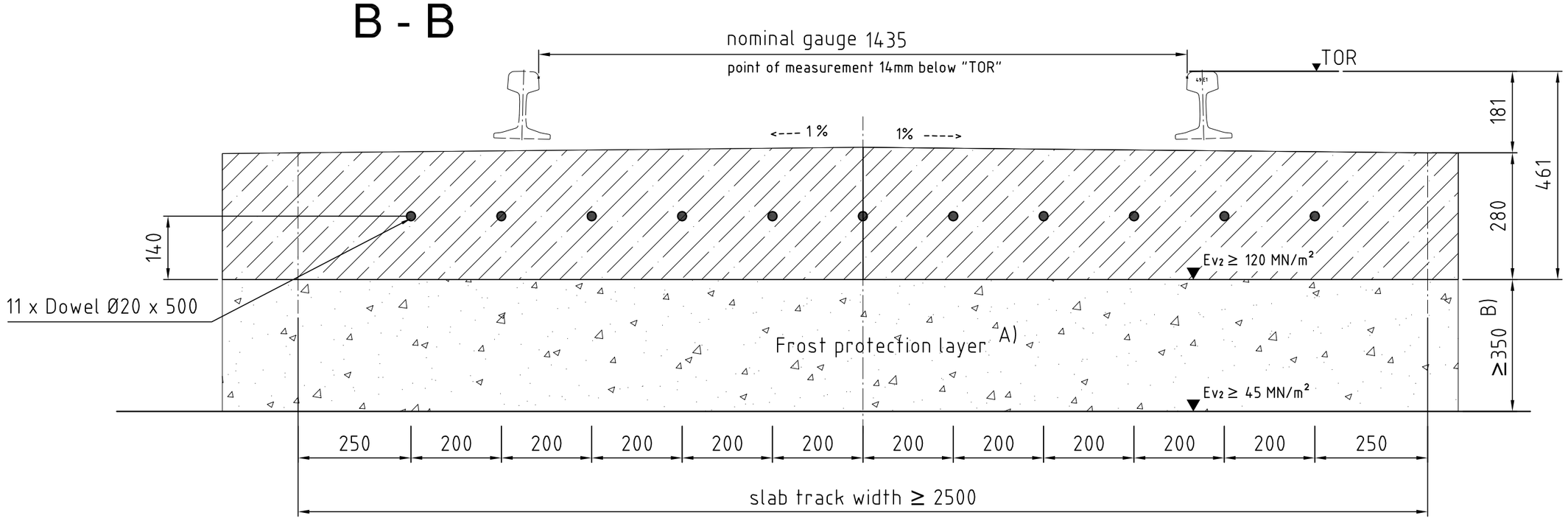

Tolerances of the track structure layers are to be consulted with the respective public transportation company!

(intended use)				(permissible variation)		(surface)	scale 1:10 (weight) (material, halffinished prod.)
					date	name	Ballastless track - System RHEDA CITY-D OF Cross section with TB/ZB.1-1435 W125-G
				editor	08.03.2016	SAECKLER	
				checked engineering	10.03.2016	ROSSMANN	
				checked sales depart.			
A	Neuanlage	08.03.2016	SAE	RAIL.ONE			document number N130286-0A; sheet 1; 1 sh.
state	design change	date	name				(exchange for:) (replaced by:)

This documentation is confidential and may only be reproduced in whole or in part and/or sent to a third party with our express permission. The contents, descriptions, and drawings are the property of RAIL.ONE GmbH and are protected by copyright and patent laws. We can make any modifications at any time, acting as an advancement, without the written or oral consent of the contractual partner. As far as any change of the contractual relation must be in written form, the modification is deemed to be not such a change. As far as the modifications are affecting the contractual relation, we will inform our partner accordingly.